USER MANUAL

Model: A65P

copyright statement

The products described in this manual may contain software copyrighted by Guangzhou Jingxin Technology Co., Ltd. or a third party. Without the written permission of the relevant right holders, no user, organization or individual may copy, modify, distribute, reverse engineer, disassemble, decode, decompile, rent, transfer or otherwise infringe upon the copyrights of the aforementioned software in any form.

Without written permission, any unit or individual shall not make any form of excerpt or copy of all or part of this document in any way or for any reason. All information contained in this manual is protected by copyright, and all rights are reserved by Guangzhou Jingxin Technology Co.

Modify Record

Version	Description	Date
V1.0	initial version	September 28, 2021

CONTENTS

CHAPTER 1 ABOUT A65P 12

MAIN FEATURES OF THE EQUIPMENT 12

EQUIPMENT PARAMETER SPECIFICATION 13

APPEARANCE DESCRIPTION 14

INSTALLATION DIAGRAM 15

COMMUNICATION OUTPUT CABLE 16

INTELLIGENT COMMISSIONING OPERATING INSTRUCTIONS 17

MECHANICAL FOCUSING OPERATION OPERATING INSTRUCTIONS 18

CHAPTER 2 SYSTEM SETUP 19

RESTORE DEFAULT SETTINGS 19

CUSTOMIZED SETTINGS 20

SCANNING MODE 21

CONTINUOUS SCANNING MODE 22

TRIGGER MODE 23
PULSE TRIGGER POTENTIAL 24
AUTO SENSING MODE 25
AUTO-SENSING SENSITIVITY 26
SAME BARCODE READING MODE 27
DECODING TIME 30
RESET DECODE TIME 31
DECODE DATA CHECKING 32
READ FAILURE MESSAGE 33
DECODE SUCCESS (GOOD) / FAILURE (NG) SIGNAL OUTPUT TIME 34
SIGHTING LIGHT 35
FILL LIGHT OPERATING MODE 36
FILL LIGHT INTENSITY 37
STARTUP BEEPS 38
DECODING BEEPS 39
DECODE BEEP FREQUENCY 40
DEBUG KEYS 41
CHAPTER 3 OUTPUT MODES 42
USB KEYBOARD PORT 42

USB VIRTUAL SERIAL PORT 43
SERIAL PORT 44
Serial Baud Rate 45
Serial Data Bit Transfer 46
Serial Parity Characters 47
Serial Stop Bits 48
CODE PAGE CHARACTER ENCODING 49
CHAPTER 4 BARCODE SETUP 50
SUPPORT CODE SYSTEM 50
OPEN ALL BARCODES 52
ONE-DIMENSIONAL CODE ONLY 53
QR CODE ONLY 54
CLOSE ALL BARCODES 55
CLOSE ONE-DIMENSIONAL CODE 56
CLOSE QR CODE 57
UPC A 58
First place in transmission 59
Check Code 60
Conversion to EAN 13 61

Enable/disable 2/5 digit additional code 62
Limit reading to 2/5 additional digits 63
UPC E 64
Transmission First 65
Check Code 66
Conversion to UPC A 67
Enable/disable 2/5 digit additional code 68
Restricted to read 2/5 digit additional code 69
EAN 8 70
Transmit Check Bit 71
Convert to EAN 13 72
Enable/disable 2/5 digit additional code 73
Limit reading to 2/5 digit additional code 74
EAN 13 75
Transmit Check Bit 76
ISBN Conversion 77
ISSN Conversion 78
Enable/disable 2/5 digit additional code 79
Limit reading to 2/5 additional digits 80
CODE 128 / GS1 -128 81

Code 128 Decode Length Setting 82
CODE 39 84
Full ASCII 85
Starting/ending symbols 86
Calibration 87
Code 39 Decode Length Setting 88
CODE 32 90
Starting symbol/ending symbol 91
CODE 93 92
Code 93 Decode Length Setting 93
CODE 11 95
Transmit Check Bit 96
Code 11 Decode Length Setting 97
CODABAR 99
Calibration 100
Starting/ending symbols 101
Codabar Decode Length Setting 102
PLESSEY 104
Plessey Decode Length Setting 105
MSI PLESSEY 107

Calibration 108
Transmit Check Bit 110
MSI Plessey Decode Length Setting 111
INTERLEAVED 2 OF 5 113
Calibration 114
Interleaved 2 of 5 Decode Length Setting 115
MATRIX 2 OF 5 117
Matrix 2 of 5 Decode Length Setting 118
IATA 2 OF 5 120
STRAIGHT 2 OF 5 121
PHARMACODE 122
GS1 DATABAR 14 123
GS1 DataBar 14 Stacked 124
AI (01) Character Transmit Setting 125
GS1 DATABAR EXPANDED 126
GS1 DataBar Expanded Stacked ..... Stacked
AI (01) Character Transmission Setting 128
GS1 DATABAR LIMITED 129
AI (01) Character Transmit Setting 130
COMPOSITE CODE-A 131

COMPOSITE CODE-B 132
COMPOSITE CODE-C 133
PDF417 134
MICRO PDF417 135
DATA MATRIX 136
Rectangular Data Matrix 137
Mirror Decoding 138
QR 139
Mirror decoding 140
MICRO QR 141
AZTEC 142
Mirror Decoding 143
MAXICODE 144
CHAPTER 5 DATA EDITING 145
OUTPUT FORMAT 145
BARCODE MESSAGES 146
BARCODE IDENTIFICATION CODE 147
PREFIXES 149
SUFFIX 151

REMOVE FRONT-END LITERALS 153
REMOVE END CHARACTERS 155
TERMINAL CHARACTERS 157
CAPS LOCK 159
GS CHARACTER CONVERSION 160
FUNCTION KEY MAPPING 162
CHAPTER 6 SERIAL COMMANDS 164
TRANSMIT AND RECEIVE FORMATS , FEEDBACK MESSAGES 164
SETUP PROCESS 165
READ PROCESS 166
COMMAND SETTING EXAMPLE 167
SETTING THE SCAN TRIGGER STRING 168
SETTING THE STOP SCAN STRING 169
INSTRUCTION SET 170
APPENDIX I DECIMAL NUMBERS 181
APPENDIX II BARCODE SETUP CODE 182
APPENDIX III ASCII CODE TABLE 186
APPENDIX IV FUNCTION KEYS 218

Chapter 1 About A65P

A65P is a high-performance fixed industrial barcode scanner designed for industrial automation applications, built-in mechanical focus can be set according to the scanning needs of HD; SR; LR three scanning focal lengths, equipped with 1.3 megapixel high-resolution sensor maximum processing frame rate of up to 120 FPS to meet a variety of high-speed industrial scanning applications.

Main features of the equipment

- Intelligent Light System

Built-in intelligent light source adjustment function, to meet the general scene and industrial production line of different materials (such as reflective), shape (curved surface), background and barcode color of

all kinds of complex scanning needs.

- Flexible I/O Expansion Interface

Easily realize external trigger scanning through I/O expansion interface, support 1 channel photocouple isolated input (NPN / PNP / Relay) and 2 channels photocouple isolated output (Good ; NG) can control external devices.

- Mechanical Focusing

Built-in mechanical focus can be set according to the scanning needs High Density (HD); Standard Distance (SR); Long Range (LR) three scanning distances.

Equipment Parameter Specification

Scanning Performance	Resolution (of a photo)		1080 * 1280 (1.3M)
	Field of view		Horizontal 30° (H), Vertical 33° (V)
	Illumination		High brightness red light source / High brightness white light source
	Focus (a camera)		Cross laser aiming
	Recognition mode		Auto-sensing, external pulse trigger mode, continuous scan mode, serial command mode
	System for reading and writing codes	1D	UPC A , UPC E , EAN 8 , EAN 13 , Code 128 , Code 39 , Code 93 , Code 32 , Code11 , Codabar ,Plessey , MSI , Interleaved 2 of 5 , IATA 2 of 5 , Matrix 2 of 5 , Straight 2 of 5 , Pharmacode , RSS-14 , RSS-14 Expanded , RSS-14 Limited , Composite Code-A , Composite Code-B , Composite Code-C
		2D	PDF 417 , Micro PDF 417 , Data Matrix , QR , Micro QR , Aztec , MaxiCode

	Typical reading	focal length	HD	SR	LR
		depth of field	Code39 (3 mil) : 90 ~145 ; QR (5 mil) : 90 ~125	Code39 (4 mil) : 105 ~180 ; EAN-13 (13 mil) : 60 ~400	EAN-13 (13 mil) : 60 ~620
		accurate	1D ≧ 3 mil ; 2D ≧ 5 mil	1D ≧ 3 mil ; 2D ≧ 5 mil	1D ≧ 5 mil ; 2D ≧ 9 mil
	Print Contrast	⩾20% (UPC/EAN 100% , PCS 90%)			
Mechanical / Electrical parameters	Exterior Dimensions	36(W)×43(D)×24(H)(mm)			
	Shell material	aluminum			
	Enclosure protection	IP65			
	Alerts	Buzzer, Indicator			
	newsletter	RS232, USB (HID ; CDC), Ethernet / Ethernet (TCP/UDP/Modbus)			
	electricity supply	5-36 VDC			
	external input	1 opto-coupler isolated input (NPN / PNP / Relay)			
	external output	2 opto-coupler isolated outputs (Good ; NG)			
	Current @ 5 VDC	Operating current 300 mA ±5% (typical), 750 mA ±5% (maximum) Standby current 100 mA ±5%			
Environmental parameters	Storage temperature	-40℃~+70℃			
	operating temperature	-20℃~+50℃			
	electrostatic protection	±20 kV (air discharge), ±8 kV (direct discharge)			
safety norm	CE EN55022 , FCC Part 15 Class B , CE EMC Class B				

*Test conditions: ambient temperature = 23 ° C; ambient illumination = 300 LUX incandescent lamps

Depth of field data is subject to change due to process and application. Subject to change without notice

Appearance Description

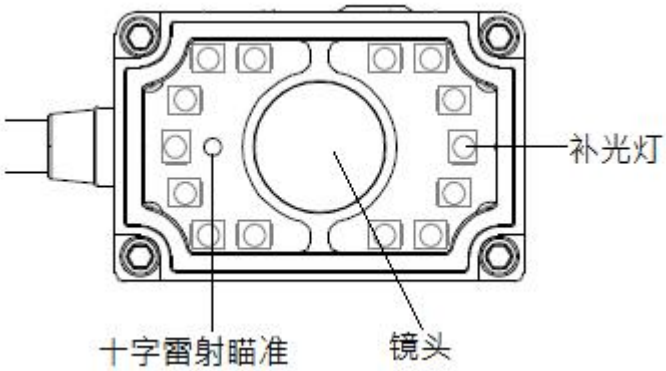

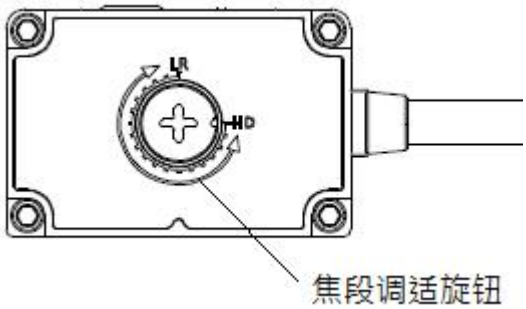

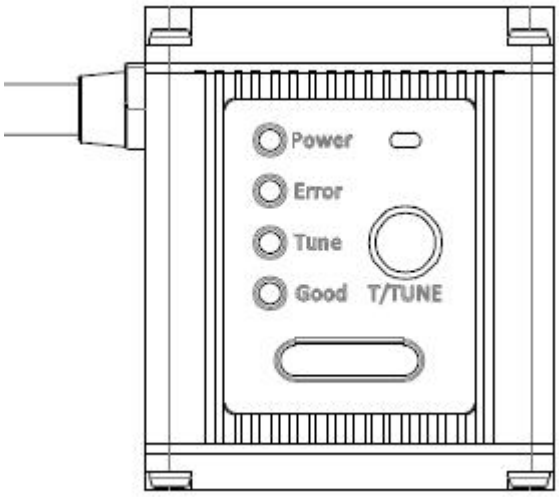

status indicator	
state of affairs	color
Power Indicator / Power	orange (color)
Decode Success Indicator / Good	greener
Decode Failure Indicator / Error	red (color)
Adaptation Mode Indicator / Tune	blue (color)

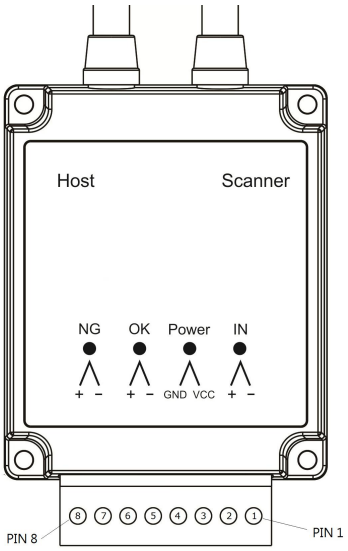

pin	code	functionality
1	Optical switch input (-)	Trigger signal input
2	Optical switch input (+)	
3	Supply VCC (+)	5-36 VDC
4	Power supply GND (-)	
5	Decode Successful (-)	Successful decoding signal output
6	Decode Successful (+)	
7	Decoding Failure (-)	Decode Failure Signal Output
8	Decode Failure	

	(+)	

Installation Diagram

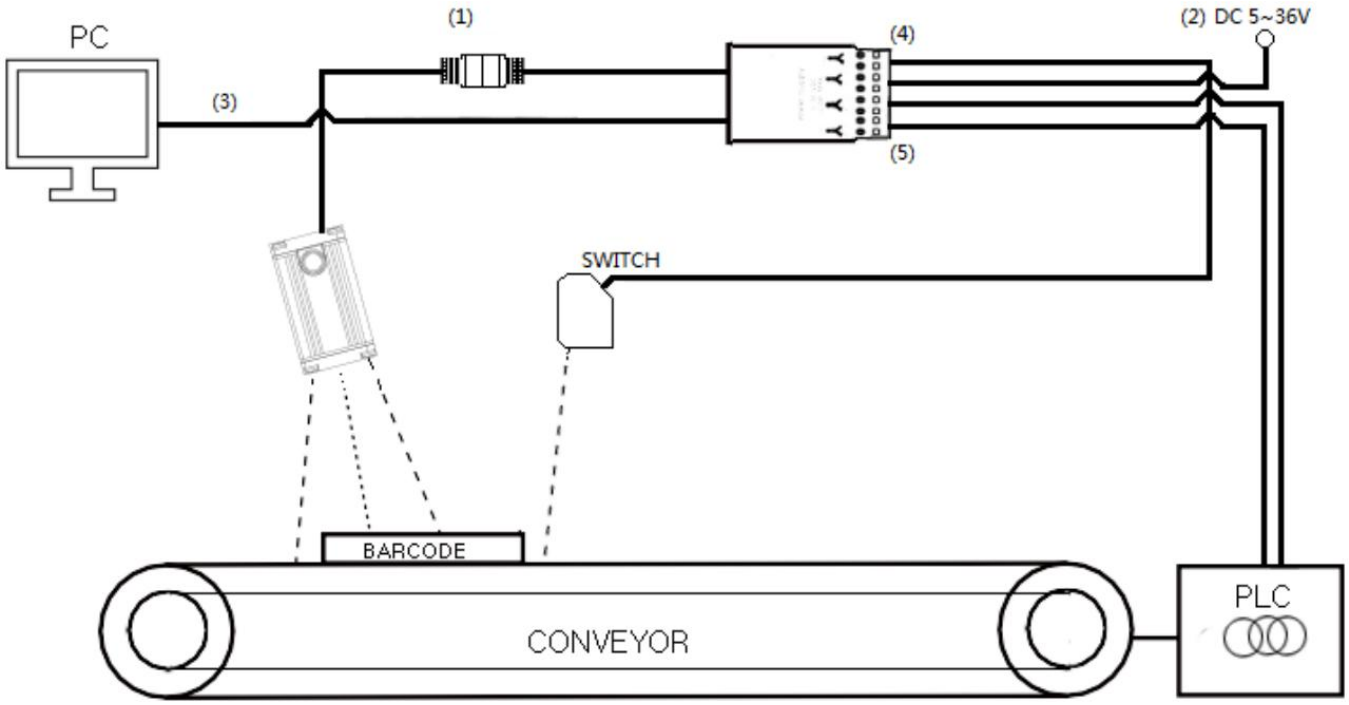

For first time use, please install and connect the code reader as shown above.

(1) Airline plug connector to connect the reader to the wire

(2) Connect 5~36V DC external power supply, if use USB communication cable can not connect external power supply.

(3) Connect the communication port to a PC or data acquisition terminal, supporting RS232, USB, and Ethernet communication.

(4) If "External trigger input mode" is used, an external sensor/PLC needs to be connected.

(5) If you need the code reader to output the code reading feedback OK signal or NG signal, connect the 5-8Pin pin to the external device.

Communication output cable

USB (HID ; CDC)

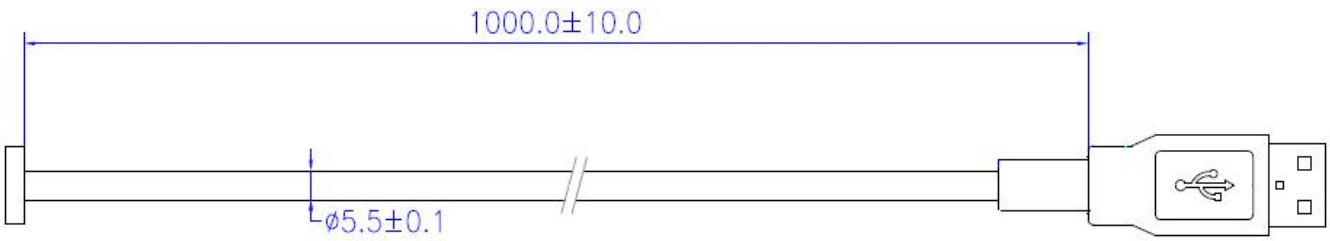

RS232 SERIAL PORT

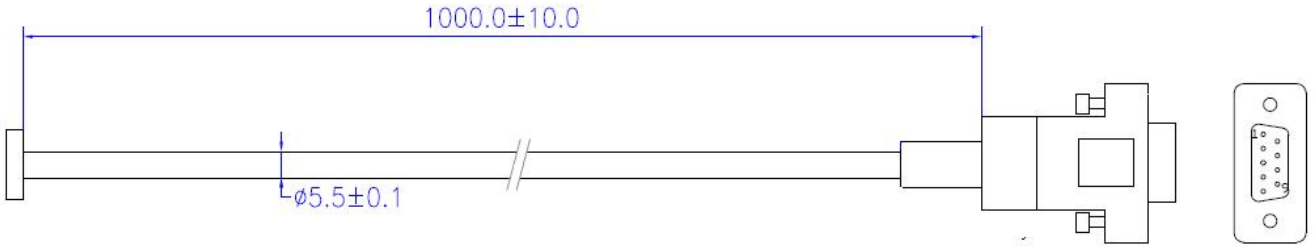

Ethernet (TCP/UDP/MODBUS)

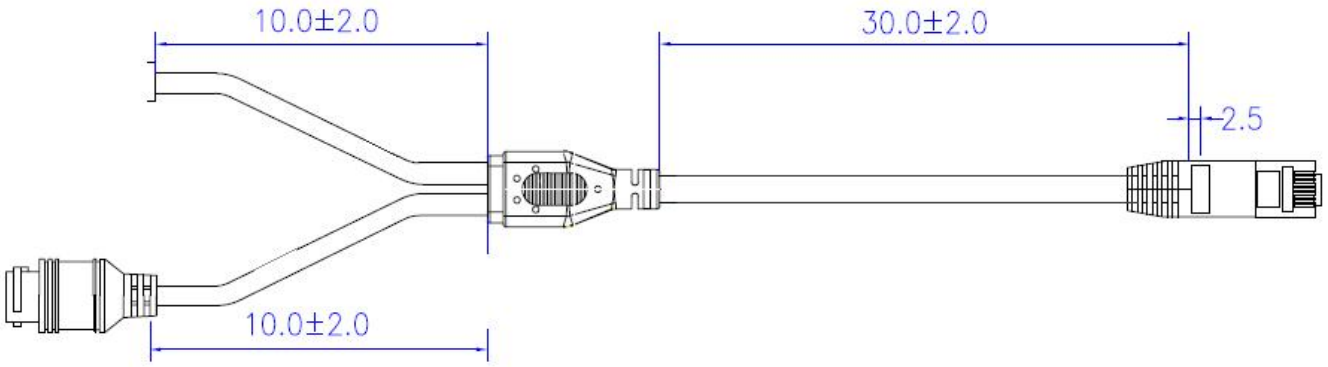

Intelligent commissioning operating instructions

(1) Press the debug button debug mode (blue indicator)

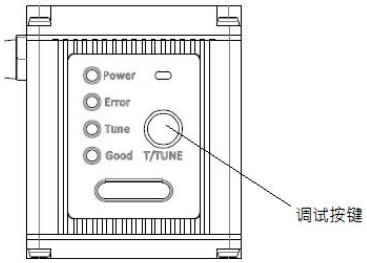

(2) Aim the scanner at the barcode you want to decode.

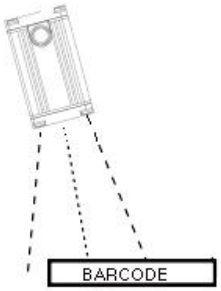

(3) Press the debug button to start intelligent debugging.

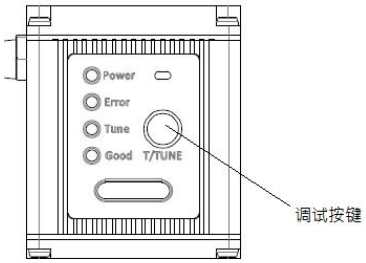

(4) When debugging is finished, the status indicator shows the debugging result, green light means success, red light means failure.

Successful settings are automatically memorized and can be used immediately after reloading, no need to repeat debugging.

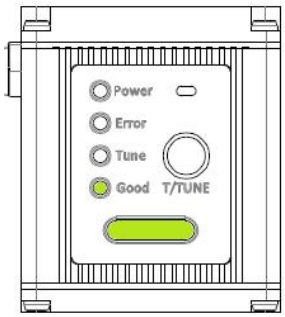

(5) Press the debug button to return to scanning mode.

Mechanical Focus Operating Instructions

(1) **HD focal length:** Use a Phillips screwdriver to rotate the knob to the HD position.

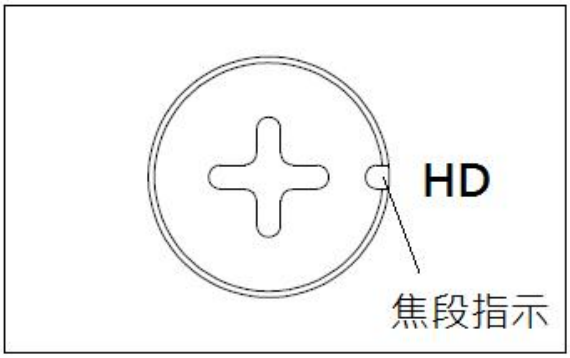

(2) **LR focal length:** Use a Phillips screwdriver to rotate the knob to the LR position.

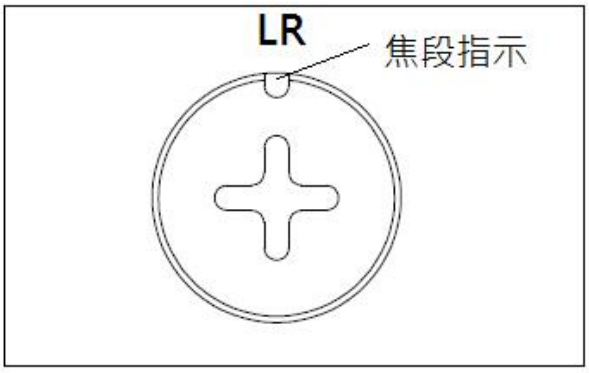

(3) **SR focal length:** Use a Phillips screwdriver to rotate the knob to the center of HD and LR.

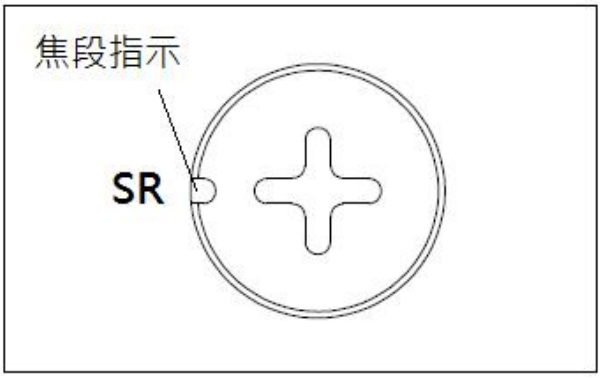

Chapter II. System setup

Restore default settings

Will restore all attributes of the scanner to the factory state

Start Setup

Restore default settings

Ending

Settings

customize

Save Customized Settings : Save frequently used settings.

Load Customization: Sets saved customization settings.

Start Setup

Save customized settings

Load customized settings

Ending Settings

scanning mode

Continuous scanning.

Read single or multiple barcodes consecutively (define the decoding sequence by setting the interval between readings of the same code), start or end scanning by pressing and releasing the scanning key.

Trigger Mode.

1. Level triggering

Scanning starts when a level signal occurs (high to low triggers scanning, low to high).

potentials to end the scan), and ends the scan when the read time is exceeded (the default decode time is 3 seconds, which can be

Change the decoding time by setting)

2. Pulse triggering.

Scanning starts when a pulse signal occurs (default is high to low trigger scanning through the trigger voltage).

bit setting to change the trigger potential) and ends the scan when the read time is exceeded (default decode time

(3 seconds, decoding time can be changed by setting)

Auto-sensing.

Start scanning when image changes, end scanning when reading time exceeds (Default decoding time is 3 seconds, you can change the decoding time through the settings).

Continuous scanning mode

Start Setup

Continuous Scan (default)

Ending Settings

Trigger Mode

Start Setup

level trigger

pulse triggering

Ending Settings

Pulse Trigger Potential

Start Setup

Trigger scan when high potential changes to low potential (default)

Scanning triggered when a low potential is changed to a high potential

Ending Settings

Auto-sensing mode

Start Setup

auto-sensing

Ending
Settings

Auto-sensing sensitivity

Start Setup

low sensitivity

Medium sensitivity (default)

high sensitivity

Ending Settings

Same barcode reading mode

Same barcode reading in auto-sensing, continuous scanning, and pulse-triggered modes

The default is not to read the same barcode within 500 ms reading, 0~5000 ms can be set, 0 means no interval time.

● Does not read the same barcode in the interval time

If the same barcode is read continuously within the set time, the barcode will be ignored and not output to avoid repeated reading of the same code.

Does not output the same barcode read repeatedly within 100ms

Scanning "Start Setup"
Scanning "Do not read the same barcode in the interval" Setting code
Scanning the "Read Time" Setting Code
Scanning Appendix Decimal Numbers, "1" Setting Code
Scanning Appendix Decimal Numbers, "0" Setting Code
Scanning Appendix Decimal Numbers, "0" Setting Code
Scanning "End Settings"

● Does not read the last barcode read

Does not repeat the last barcode read

- Does not read the last two read barcodes

  Does not repeat the last two read barcodes

Same barcode reading mode

Start Setup

Does not read the same barcode within the interval (default)

Does not read the last barcode read

Does not read the last two read barcodes

Ending Settings

Same barcode reading time

Start Setup

Reading time (ms)

Ending Settings

decoding time

Read time after trigger in key mode, pulse mode, auto-sensing mode, if no barcode is read after more than time, the decoding will be turned off and enter standby mode, default 3000ms can be set from 0 to 3600000ms, 0 means decode continuously until read.

Set the maximum reading time to take 5 seconds

Scanning "Start Setup"

Scanning the "Decode Time" setting code

Scanning Appendix Decimal Numbers, "5" Setting Code

Scanning Appendix Decimal Numbers, "0" Setting Code

Scanning Appendix Decimal Numbers, "0" Setting Code

Scanning Appendix Decimal Numbers, "0" Setting Code

Scanning "End Settings"

Start Setup

Decoding time (ms)

Ending Settings

Reset Decode Time

In key mode, pulse mode, auto-sensing mode, reset the decoding time after successful decoding and continue to decode, if the decoding time is 0, the decoding will be turned off after successful decoding.

Start Setup

Close scanning immediately after successful decoding (default)

Reset the decoding time after successful decoding and continue to decode different contents of the barcode.

Ending Settings

Decode data checking

Start Setup

Close (default)

Output after secondary reading

Output after three readings

Ending Settings

Failed to read message

Start Setup

- Outputs a failure message if the barcode is not read at the end of scanning in serial mode.

Turn off read failure messages

Open Read Failure

Message

- Default read failure message is "NG", up to 8 ASCII characters can be set

Set read failure message to Bad

1. Scan for "Set read failure message"

3. Scanning the ASCII Code Table, B Setup Code

3. Scanning the ASCII Code table,a setting code

3. Scan the ASCII Code table,d set code

4. Scanning for "end settings"

Setting the read failure message

Ending Settings

Decode Success (Good) / Failure (NG) Signal Output Time

Decode Good / NG signal output time in key mode, pulse mode, auto-sensing mode, default 250ms can be set 1~500ms.

Set the signal output time to take 500 milliseconds.

Scanning "Start Setup"

Scanning the "Decode Time" setting code

Scanning Appendix Decimal Numbers, "5" Setting Code

Scanning Appendix Decimal Numbers, "0" Setting Code

Scanning Appendix Decimal Numbers, "0" Setting Code

Scanning "End Settings"

Start Setup

Signal output time (ms)

Ending Settings

sighting light

Start Setup

Always on (default)

On during scanning

cloture

Ending Settings

Fill light working mode

Start Setup

On during scanning (default)

Always on.

Fade Up

cloture

Ending Settings

Fill light intensity

Start Setup

low brightness

Medium order brightness

High brightness (default)

Ending Settings

boot-up beep

Start Setup

On (default)

cloture

Ending Settings

Decode Beep

Start Setup

On (default)

cloture

Ending Settings

Decode Beep Frequency

Start Setup

Minimum - 800 Hz

Low - 1600 Hz

Medium - 2730 Hz (default)

High - 4200 Hz

Ending Settings

Debug Keys

Start Setup

On (default)

cloture

Ending Settings

Chapter III. Output modalities

USB keyboard port

Start Setup

USB keyboard port output (default)

Ending Settings

USB virtual serial port

Start Setup

USB Virtual Serial Output

Ending Settings

serial port (computing)

Start Setup

serial output

Ending Settings

serial port baud rate

Start Setup

9600 (default)

19200

38400

57600

115200

230400

Ending Settings

Serial Data Bit Transfer

Start Setup

7 data bits

**8 data bits

Ending Settings

Serial Parity Characters

Start Setup

**No checks

odd-calibration

even-calibrated

Ending Settings

serial port stop bit

Start Setup

** a stop bit

Two stop bits

Ending Settings

Code Page Character Codes

Start Setup

Simplified Chinese (GB2312) - Unicode / Excel ; Notepad

Simplified Chinese (GB2312) - Code Page / Word

Ending Settings

Chapter 4 Barcode Setup

Support Code System

UPC A	Enabled by default
UPC E	Enabled by default
EAN 8	Enabled by default
EAN 13	Enabled by default
Code 128 / GS1-128	Enabled by default
Code 39	Enabled by default
Code 93	cloture
Code 32	cloture
Code 11	cloture
Codabar	cloture
Plessey	cloture
MSI Plessey	cloture
Interleaved 2 of 5	Enabled by default
IATA 2 of 5	cloture
Matrix 2 of 5	cloture

Straight 2 of 5	cloture
Pharmacode	cloture
GS1 DataBar 14	cloture
GS1 DataBar 14 Stacked	cloture
GS1 DataBar Expanded	cloture
GS1 DataBar Expanded Stacked	cloture
GS1 DataBar Limited	cloture
Composite Code-A	cloture
Composite Code-B	cloture
Composite Code-C	cloture
PDF417	cloture
Micro PDF417	cloture
Data Matrix	Enabled by default
QR	Enabled by default
Micro QR	cloture
Aztec	cloture
MaxiCode	cloture

Open all barcodes

Start Setup

Open all barcodes

Ending Settings

One-dimensional code only

Start Setup

One-dimensional code only

Ending Settings

QR code only

Start Setup

QR code only

Ending Settings

Close all barcodes

Start Setup

Close all barcodes

Ending Settings

Close the one-dimensional code

Start Setup

Close the one-dimensional code

Ending Settings

Close QR Code

Start Setup

Close QR Code

Ending Settings

UPC A

Start Setup

Enable UPC A (default)

Close UPC A

Ending Settings

transmission top priority

Start Setup

Transmit First (default)

Non-transmission of the first

Ending Settings

check digit

Start Setup

Start check code (default)

Close check code

Ending Settings

Conversion to EAN 13

Start Setup

Open EAN 13 conversion

Disable EAN 13 conversion (default)

Ending Settings

Enable/disable 2/5 digit additional code

Start Setup

Enable UPC A 2/5-bit add-on code

Disable UPC A 2/5-digit add-on code (default)

Ending Settings

Limit reading to 2/5 additional digits

Start Setup

Reads only the UPC A 2/5-bit add-on code

Reads UPC A and UPC A 2/5 digit additional code (default)

Ending Settings

UPC E

Start Setup

Enable UPC E (default)

Close UPC A

Ending Settings

transmission top priority

Start Setup

Transmit First (default)

Non-transmission of the first

Ending Settings

check digit

Start Setup

Enable check code (default)

Close check code

Ending Settings

Conversion to UPC A

Start Setup

Enable UPC A conversion

Turn off UPC A conversion (default)

Ending Settings

Enable/disable 2/5 digit additional code

Start Setup

Enable UPC E 2/5-bit add-on code

Disable UPC E 2/5-bit add-on code (default)

Ending Settings

Limit reading to 2/5 additional digits

Start Setup

Reads only the UPC E 2/5-bit add-on code

Reads UPC E and UPC E 2/5 digit additional code (default)

Ending Settings

EAN 8

Start Setup

Enable EAN 8 (default)

Close EAN 8

Ending Settings

transmit parity bit

Start Setup

Transmit parity bit (default)

The parity bit is not transmitted.

Ending Settings

Conversion to EAN 13

Start Setup

Open EAN 13 conversion

Disable EAN 13 conversion (default)

Ending Settings

Enable/disable 2/5 digit additional code

Start Setup

Enable EAN 8 2/5-digit add-on code

Disable EAN 8 2/5-digit add-on code (default)

Ending Settings

Limit reading to 2/5 additional digits

Start Setup

Reads only EAN 8 2/5-digit add-on codes

Reads EAN 8 and EAN 8 2/5 digit additional codes (default)

Ending Settings

EAN 13

Start Setup

Enable EAN 13 (default)

Closure of EAN 13

Ending Settings

transmit parity bit

Start Setup

Transmit parity bit (default)

The parity bit is not transmitted.

Ending Settings

ISBN conversion

Start Setup

Open ISBN conversion

Turn off ISBN conversion (default)

Ending Settings

ISSN conversion

Start Setup

Enable ISSN conversion

Turn off ISSN conversion (default)

Ending Settings

Enable/disable 2/5 digit additional code

Start Setup

Enable EAN 13 2/5-digit add-on code

Disable EAN 13 2/5-digit add-on code (default)

Ending Settings

Limit reading to 2/5 additional digits

Start Setup

Reads only EAN 13 2/5 digit add-on codes

Reads EAN 13 and EAN 13 2/5 digit add-on codes (default)

Ending Settings

Code 128 / GS1 -128

Start Setup

Enable Code 128 / GS1-128 (default)

Close Code 128 / GS1-128

Ending Settings

Code 128 decode length setting

Setup example.

Restricts reading of Code 128 codes to 5 - 18 characters in length.

Scan Start Settings

Scan Code 128 Limit Length Range Setting Code

Scanning ASCII Code table, numeric 0 barcode

Scanning ASCII Code table, numeric 5 barcode

Scanning ASCII Code Table, Digital 1 Barcode

Scanning ASCII Code table, numeric 8 barcode

End-of-scan settings

Unlimited length

Scan Start Settings

Scan Code 128 , any length setting code

End-of-scan settings

Code 128 decode length setting

Start Setup

Limit single length

Limit two different lengths

Limit length range

Unlimited length (default)

Ending Settings

Code 39

Start Setup

Enable Code 39 (default)

Close Code 39

Ending Settings

Full ASCII

Start Setup

Enabling Code 39 Full ASCII

Disable Code 39 Full ASCII function (default)

Ending Settings

Beginning/End

Start Setup

Transmission start/end character

Do not transmit start/end characters (default)

Ending Settings

calibration

Start Setup

No checksum (default)

Calibrate and transmit

checksum is not transmitted

Ending Settings

Code 39 Decode Length Setting

Setup example.

Restricts reading of Code 39 codes to 5 - 18 characters in length

Scan Start Settings

Scan Code 39 Limit Length Range Setting Code

Scanning ASCII Code table, numeric 0 barcode

Scanning ASCII Code table, numeric 5 barcode

Scanning ASCII Code Table, Digital 1 Barcode

Scanning ASCII Code table, numeric 8 barcode

End-of-scan settings

Unlimited length

Scan Start Settings

Scan Code 39 , any length setting code

End-of-scan settings

Code 39 Decode Length Setting

Start Setup

Limit single length

Limit two different lengths

Limit length range

Unlimited length (default)

Ending Settings

Code 32

Start Setup

Enable Code 32

Close Code 32 (default)

Ending Settings

Beginning/End

Start Setup

Transmission start/end character

Do not transmit start/end characters (default)

Ending Settings

Code 93

Start Setup

Enable Code 93

Close Code 93 (default)

Ending Settings

Code 93 Decode Length Setting

Setup example.

Restricts the reading of Code 93 codes to 5 - 18 characters in length.

Scan Start Settings

Scan Code 93 Limit Length Range Setting Code

Scanning ASCII Code table, numeric 0 barcode

Scanning ASCII Code table, numeric 5 barcode

Scanning ASCII Code Table, Digital 1 Barcode

Scanning ASCII Code table, numeric 8 barcode

End-of-scan settings

Unlimited length

Scan Start Settings

Scan Code 93 , any length setting code

End-of-scan settings

Code 93 Decode Length Setting

Start Setup

Limit single length

Limit two different lengths

Limit length range

Unlimited length (default)

Ending Settings

Code 11

Start Setup

Enabling Code 11

Turn off Code 11 (default)

Ending Settings

transmit parity bit

Start Setup

Transmit parity bit (default)

The parity bit is not transmitted.

Ending Settings

Code 11 Decode Length Setting

Setup example.

Restricts the reading of Code 11 codes to 5 - 18 characters in length.

Scan Start Settings

Scan Code 11 Limit Length Range Setting Code

Scanning ASCII Code table, numeric 0 barcode

Scanning ASCII Code table, numeric 5 barcode

Scanning ASCII Code Table, Digital 1 Barcode

Scanning ASCII Code table, numeric 8 barcode

End-of-scan settings

Unlimited length

Scan Start Settings

Scan Code 11, any length setting code

End-of-scan settings

Code 11 Decode Length Setting

Start Setup

Limit single length

Limit two different lengths

Limit length range

Unlimited length (default)

Ending Settings

Codabar

Start Setup

Enable Codabar

Close Codabar (default)

Ending Settings

calibration

Start Setup

No checksum (default)

Calibrate and transmit

checksum is not transmitted

Ending Settings

Beginning/End

Start Setup

Transmission start/end character

Do not transmit start/end characters (default)

Ending Settings

Codabar Decode Length Setting

Setup example.

Restriction on reading Codabar codes with a length of 5 - 18 characters

Scan Start Settings

Scanning Codabar Limit Length Range Setting Code

Scanning ASCII Code table, numeric 0 barcode

Scanning ASCII Code table, numeric 5 barcode

Scanning ASCII Code Table, Digital 1 Barcode

Scanning ASCII Code table, numeric 8 barcode

End-of-scan settings

Unlimited length

Scan Start Settings

Scanning Codabar , any length setting code

End-of-scan settings

Codabar Decode Length Setting

Start Setup

Limit single length

Limit two different lengths

Limit length range

Unlimited length (default)

Ending Settings

Plessey

Start Setup

Enable Plessey

Turn off Plessey (default)

Ending Settings

Plessey Decode Length Setting

Setup example.

Limit reading of Plessey codes to 5 - 18 characters in length

Scan Start Settings

Scanning Plessey Limit Length Range Setting Code

Scanning ASCII Code table, numeric 0 barcode

Scanning ASCII Code table, numeric 5 barcode

Scanning ASCII Code Table, Digital 1 Barcode

Scanning ASCII Code table, numeric 8 barcode

End-of-scan settings

Unlimited length

Scan Start Settings

Scanning Plessey, any length setting code

End-of-scan settings

Plessey Decode Length Setting

Start Setup

Limit single length

Limit two different lengths

Limit length range

Unlimited length (default)

Ending Settings

MSI Plessey

Start Setup

Enable MSI Plessey

Turn off MSI Plessey (default)

Ending Settings

Start Setup

not calibrated

Mod 10 calibration (default)

Ending Settings

calibration

Start Setup

Mod 10/10 calibration

Mod 11/10 calibration

Ending Settings

transmit parity bit

Start Setup

Transmit parity bit (default)

The parity bit is not transmitted.

Ending Settings

MSI Plessey Decode Length Setting

Setup example.

Restricts reading of MSI Plessey codes to 5 - 18 characters in length

Scan Start Settings

Scanning MSI Plessey Limit Length Range Setting Code

Scanning ASCII Code table, numeric 0 barcode

Scanning ASCII Code table, numeric 5 barcode

Scanning ASCII Code Table, Digital 1 Barcode

Scanning ASCII Code table, numeric 8 barcode

End-of-scan settings

Unlimited length

Scan Start Settings

Scanning MSI Plessey, any length setup code

End-of-scan settings

MSI Plessey Decode Length Setting

Start Setup

Limit single length

Limit two different lengths

Limit length range

Unlimited length (default)

Ending Settings

Interleaved 2 of 5

Start Setup

Enable Interleaved 2 of 5 (default)

Close Interleaved 2 of 5

Ending Settings

calibration

Start Setup

No checksum (default)

Calibrate and transmit

Ending Settings

Interleaved 2 of 5 Decode Length Setting

Setup example.

Limit reads to Interleaved 2 of 5 codes of 5 - 18 characters in length

Scan Start Settings

Scanning Interleaved 2 of 5 Restricted Length Range Setting Code

Scanning ASCII Code table, numeric 0 barcode

Scanning ASCII Code table, numeric 5 barcode

Scanning ASCII Code Table, Digital 1 Barcode

Scanning ASCII Code table, numeric 8 barcode

End-of-scan settings

Unlimited length

Scan Start Settings

Scanning Interleaved 2 of 5, any length set code

End-of-scan settings

Interleaved 2 of 5 Decode Length Setting

Start Setup

Limit single length

Limit two different lengths

Limit length range

Unlimited length (default)

Ending Settings

Matrix 2 of 5

Start Setup

Enable Matrix 2 of 5

Close Matrix 2 of 5 (default)

Ending Settings

Matrix 2 of 5 Decode Length Setting

Setup example.

Limit reads to Matrix 2 of 5 codes with a length of 5 - 18 characters.

Scan Start Settings

Scanning Matrix 2 of 5 Limit Length Range Setting Code

Scanning ASCII Code table, numeric 0 barcode

Scanning ASCII Code table, numeric 5 barcode

Scanning ASCII Code Table, Digital 1 Barcode

Scanning ASCII Code table, numeric 8 barcode

End-of-scan settings

Unlimited length

Scan Start Settings

Scanning Matrix 2 of 5, any length set code

End-of-scan settings

Matrix 2 of 5 Decode Length Setting

Start Setup

Limit single length

Limit two different lengths

Limit length range

Unlimited length (default)

Ending Settings

IATA 2 of 5

Start Setup

Enable IATA 2 of 5

Turn off IATA 2 of 5 (default)

Ending Settings

Straight 2 of 5

Start Setup

Enable Straight 2 of 5

Close Straight 2 of 5 (default)

Ending Settings

Pharmacode

Start Setup

Enable Pharmacode

Disable Pharmacode (default)

Ending Settings

GS1 DataBar 14

Start Setup

Enable GS1 DataBar 14

Close GS1 DataBar 14 (default)

Ending Settings

GS1 DataBar 14 Stacked

Start Setup

Enable GS1 DataBar 14 Stacked

Close GS1 DataBar 14 Stacked (default)

Ending Settings

AI (01) Character Transmission Setting

Start Setup

Output AI (01) character (default)

No AI (01) characters are output

Ending Settings

GS1 DataBar Expanded

Start Setup

Enable GS1 DataBar Expanded

Disable GS1 DataBar Expanded (default)

Ending Settings

GS1 DataBar Expanded Stacked

Start Setup

Enable GS1 DataBar Expanded Stacked

Close GS1 DataBar Expanded Stacked (default)

Ending Settings

AI (01) Character Transmission Setting

Start Setup

Output AI (01) character (default)

No AI (01) characters are output

Ending Settings

GS1 DataBar Limited

Start Setup

Enable GS1 DataBar Limited

Turn off GS1 DataBar Limited (default)

Ending Settings

AI (01) Character Transmission Setting

Start Setup

Output AI (01) character (default)

No AI (01) characters are output

Ending Settings

Composite Code-A

Start Setup

Enable Composite Code-A

Turn off Composite Code-A (default)

Ending Settings

Composite Code-B

Start Setup

Enable Composite Code-B

Disable Composite Code-B (default)

Ending Settings

Composite Code-C

Start Setup

Enable Composite Code-C

Disable Composite Code-C (default)

Ending Settings

PDF417

Start Setup

Enable PDF417

Close PDF417 (default)

Ending Settings

Micro PDF417

Start Setup

Enable Micro PDF417

Turn off Micro PDF417 (default)

Ending Settings

Data Matrix

Start Setup

Enable Data Matrix (default)

Close Data Matrix

Ending Settings

Rectangular Data Matrix

Start Setup

Enable Rectangular Data Matrix (default)

Close Rectangular Data Matrix

Ending Settings

mirror decoding

Start Setup

Enable mirror decoding (default)

Turn off mirror decoding

Ending Settings

QR

Start Setup

Enable QR (default)

Close QR

Ending Settings

mirror decoding

Start Setup

Enable mirror decoding (default)

Turn off mirror decoding

Ending Settings

Micro QR

Start Setup

Enable Micro QR

Disable Micro QR (default)

Ending Settings

Aztec

Start Setup

Enabling Aztec

Disable Aztec (default)

Ending Settings

mirror decoding

Start Setup

Enable mirror decoding (default)

Turn off mirror decoding

Ending Settings

MaxiCode

Start Setup

Enable MaxiCode

Turn off MaxiCode (default)

Ending Settings

Chapter V. Data editing

output format

The following is the output format of the information

Barcode Messages (4 bytes)	prefix (linguistics) (4 bytes)	AIM ID	Barcode Content	suffix (linguistics) (4 bytes)	terminal character (1 byte)

Barcode Messages

1、Default output is not output barcode message

2、Turn on and off the barcode message output through serial commands and scanning barcode.

3、Only support serial port mode, USB keyboard is not supported

The format is defined below:

Start flag 0x03 (1 byte)	Barcode Code (1 byte) hexadecimal	Barcode Length (2 bytes) 0x0001 ~0xFFFF

The barcode code system codes are as follows:

coding	two-dimensional bar code	coding	1D barcode	coding	1D barcode
0x 41	PDF417	0x61	UPC A	0x71	Pharmacode
0x 42	Micro PDF417	0x 62	UPC E	0x72	GS1 DataBar 14
0x 43	Data Matrix	0x63	EAN 8	0x73	GS1 DataBar Expanded
0x 44	QR	0x64	EAN 13	0x74	GS1 DataBar Limited
0x 45	Micro QR	0x65	Code 128	0x75	Composite Code-A
0x 46	Aztec	0x66	Code 39	0x76	Composite Code-B
0x 47	MaxiCode	0x67	Code 93	0x77	Composite Code-C
0x 48	DotCode	0x68	Code 32		
		0x69	Code 11		
		0x6A	Codabar		
		0x6B	Plessey		
		0x6C	MSI Plessey		

		0x6D	Interleaved 2 of 5		
		0x6E	IATA 2 of 5		
		0x6F	Matrix 2 of 5		
		0x70	Straight 2 of 5		

Barcode Messages

Start Setup

Close (default)

show (a ticket)

Ending Settings

barcode identifier

Start Setup

Disable barcode identification (default)

Enable AIM ID

Enable Mexxen ID

Ending Settings

Barcode Identification Table		
Symbology	Mexxen	AIM
UPC-A	A	E
UPC-E	E	E
EAN-8	FF	E
EAN-13	F	E
Code 128	K	C
Code 39	M	A
Code 93	L	G
Code 32	M	A
Code 11	o	H
Codabar	N	F
Plessey	P	P
MSI / Plessey	a	M
Interleaved 2 of 5	I	I
IATA 2 of 5	Z	R
Matrix 2 of 5	G	X
Straight 2 of 5	S	S
Pharmacode	H	X
GS1 DataBar 14	RS	e
GS1 DataBar Expanded	RX	e
GS1 DataBar Limited	RL	e
Composite CC-A	m	e

Composite CC-B	n	e
Composite CC-C	i	e
PDF417	r	L
Micro PDF417	s	L
Data Matrix	t	d
QR	u	Q
Micro QR	j	Q
Aztec	e	Z
MaxiCode	v	U

prefix (linguistics)

Add output characters in front of the barcode data, up to 4 characters can be set.

Add the a character before all barcode information.

1. Scan "Start Setup"
2. Scan "Set all code prefixes"
3. Scanning Appendix III ASCII Code Table, a Setup Code
4. Scanning for "end settings"

Remove barcoded prefixes.

1. Scan "Start Setup"
2. Scan for "Turn off all code prefixes"
3. Scanning "End Settings"

Add &1 character before EAN 13 barcode information.

1. Scan "Start Setup"
2. Scan "Set barcode prefix"
3. Scan the Appendix II barcode setup code, "EAN 13 setup code".
4. Scanning Appendix III ASCII Code Table, & Setting Codes

5. Scanning Appendix III ASCII Code Table, 1 Setup Code

7. Scanning for "end settings"

Removal of the EAN 13 prefix.

1. Scan "Start Setup"

2. Scan "Set barcode prefix"

3. Scan the Appendix II barcode setup code, "EAN 13 setup code".

3. Scanning for "end settings"

Start Setup

sable all code prefixes (default)

Set all code prefixes

Setting Barcode Prefixes Disable Barcode Prefix

Ending Settings

suffix (linguistics)

Add output characters after the barcode data, up to 4 characters can be set.

After adding the S character to all barcode data.

1. Scan "Start Setup"
2. Scan "Set all code suffixes"
3. Scanning Appendix III ASCII Code Table, S Setting Code
4. Scanning for "end settings"

Remove barcode suffix.

1. Scan "Start Setup"
2. Scan for "Turn off all code suffixes"
3. Scanning "End Settings"

After adding +2 characters to the Code 128 barcode data.

1. Scan "Start Setup"
2. Scan "Set barcode suffix"
3. Scan the Appendix II barcode setup code, "Code 128 setup code".

4. Scanning Appendix III ASCII Code Table, + Setup Code

5. Scanning Appendix III ASCII Code Table, 2 Setup Codes

7. Scanning for "end settings"

Remove the Code 128 suffix.

1. Scan "Start Setup"

2. Scan "Set barcode suffix"

3. Scan the Appendix II barcode setup code, "Code 128 setup code".

3. Scanning for "end settings"

Start Setup

ırn off all code suffixes (default)

Set all code suffixes

Setting the Barcode Suffix

Disable Barcode Suffix

Ending Settings

Remove front-end literals

Removes up to 20 characters from the front of the barcode

Remove the first 3 digits of all barcodes.

1. Scan "Start Setup"
2. Scan "Remove all code front end characters"
3. Scanning Appendix I Decimal Numbers, 3 Setup Codes
4. Scanning for "end settings"

Do not remove all barcode front-end characters.

1. Scan "Start Setup"

2. Scan "Remove all code front end characters"
3. Scanning Appendix I Decimal Numbers, 0 Setup Codes
4. Scanning for "end settings"

Remove the first 2 digits of the QR barcode data.

1. Scan "Start Setup"
2. Scan "Remove barcode front-end literals"
3. Scan Appendix II barcode setup code, "QR Setup Code"
4. Scanning Appendix I Decimal Numbers, 2 Setup Codes
5. Scanning for "end settings"

Remove QR barcode front-end literals Remove.

1. Scan "Start Setup"
2. Scan "Remove barcode front-end literals"
3. Scan Appendix II barcode setup code, "QR Setup Code"
4. Scanning Appendix I Decimal Numbers, 0 Setup Codes
5. Scanning for "end settings"

Start Setup

Remove all code front end characters

Remove barcode front-end literals

Ending Settings

Remove end literals

Remove end-of-barcode characters, up to 20 characters

Remove the last 5 digits of all barcodes.

1. Scan "Start Setup"
2. Scan "Remove all end-of-code characters"
3. Scanning Appendix I Decimal Numbers, 5 Setup Codes
4. Scanning for "end settings"

Do not remove all barcode end information: the

1. Scan "Start Setup"

2. Scan "Remove all end-of-code characters"
3. Scanning Appendix I Decimal Numbers, 0 Setup Codes
4. Scanning for "end settings"

Remove the last 2 digits of Code 39 barcode information.

1. Scan "Start Setup"
2. Scan "Remove bar code end characters"
3. Scan the Appendix II barcode setup code, "Code 39 setup code".
4. Scanning Appendix I Decimal Numbers, 2 Setup Codes
5. Scanning for "end settings"

Remove Code 39 barcode end bit removal.

1. Scan "Start Setup"
2. Scan "Remove bar code end characters"
3. Scan the Appendix II barcode setup code, "Code 39 Setup Code".
4. Scanning Appendix I Decimal Numbers, 0 Setting Code
5. Scanning for "end settings"

Start Setup

Remove all end-of-code characters

Remove Barcode End Characters

Ending Settings

terminal character

Start Setup

not have

Enter / CR (default)

Ending Settings

terminal character

Start Setup

CR / LF

TAB

Ending Settings

Caps Lock

Start Setup

Turn off Caps Lock (default)

Turn on Caps Lock

Ending Settings

GS Character Conversion

Converts GS characters in keyboard mode to other ASCII codes.

Set GS literals to be converted to # Output.

1. Scan "Start Setup"

2. Scanning "Convert GS characters"

3. Scan the ASCII Code table, # set code

4. Scanning for "end settings"

Sets GS characters to be converted to carriage return output.

1. Scan "Start Setup"

2. Scanning "Convert GS characters"

3. Scan the ASCII Code table and enter to set the code.

4. Scanning for "end settings"

Restore default values for GS characters

1. Scan "Start Setup"

2. Scan "Turn off GS character conversion"

3. Scanning for "end settings"

GS Character Conversion

Start Setup

Turn off GS character conversion (default)

Converting GS characters

Ending Settings

Function Key Mapping

Start Setup

cloture

On (default)

Ending Settings

Function Key Mapping

Start Setup

Ctrl Char Mode (default)

Alt + Unicode mode

Ending Settings

Chapter 6 Serial Commands

Transmit and Receive Formats , Feedback Messages

Command Format.

Length of information (1 dollar)	transmitter (1 dollar)	identifier (1 dollar)	directives (1 dollar)	particulars (up to 32 bits)	check digit	
					upper quartile (math.) (1 dollar)	low dollar (1 dollar)

Data length: Data length without checksum (min. 5 bits; max. 36 bits)

Transmitter : **57** (hex) for terminal to decoder or **52** (hex) for decoder to terminal

Identifier: Command Identifier

Command : Setup command

Information: Setting content

Check digit calculation method : 0x10000 - [Data length] - [Transmitter] - [Identifier] - [Command] - [D1 + D2 +D3 +.....]

Feedback Message.

When the terminal transmits a command to the device, the device will send back the following message so that the terminal can determine the success or failure of the command

If the setting is successful, transmit the following 5 bytes of hexadecimal data **(ACK)** to the terminal in sequence.

52	A0	EC	FE	74

If the setting fails, transmit the following 5 bytes of hexadecimal data (NAK) to the terminal in sequence.

52	A0	E0	FE	80

Setup Process

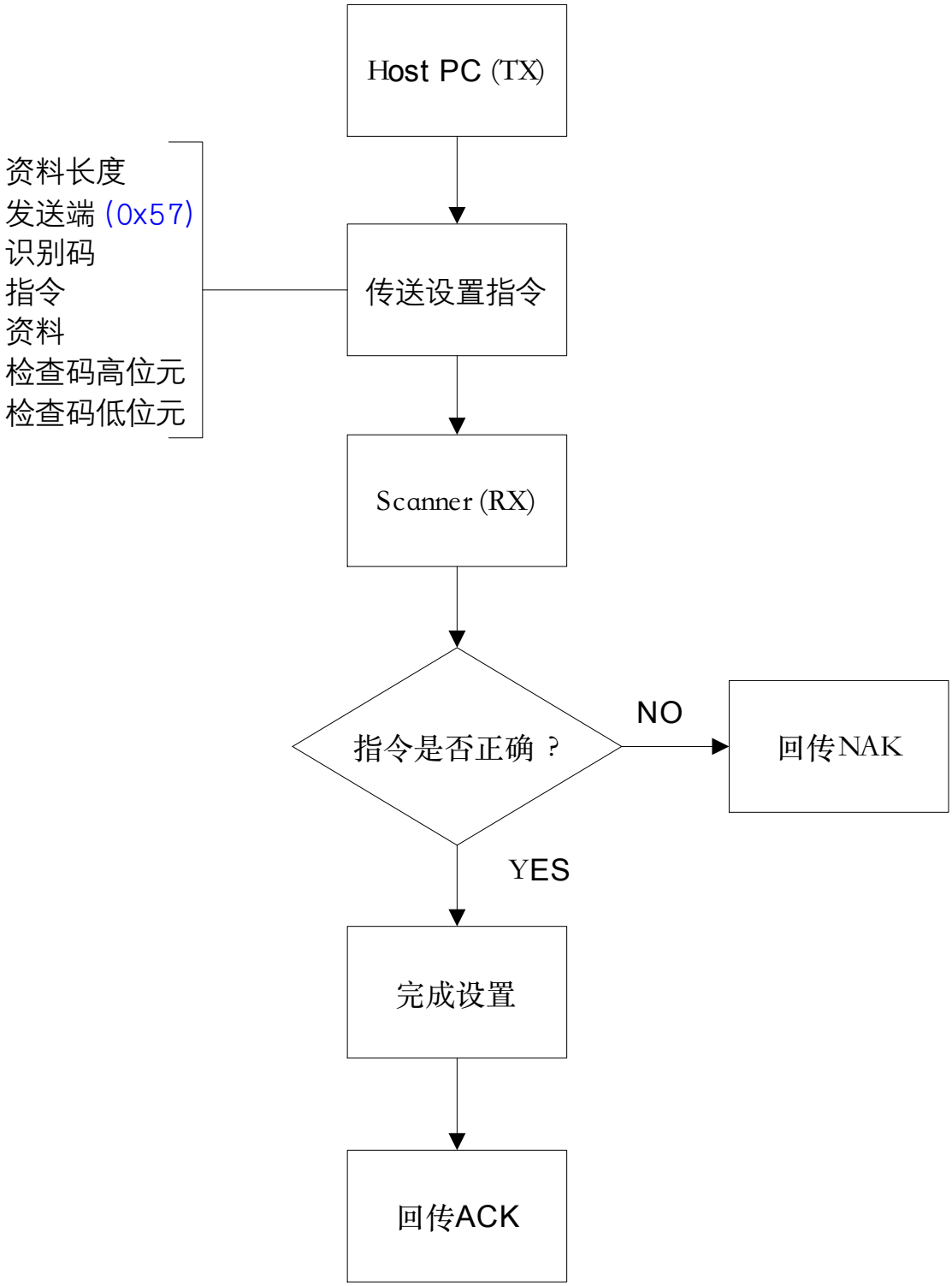

retrieval process

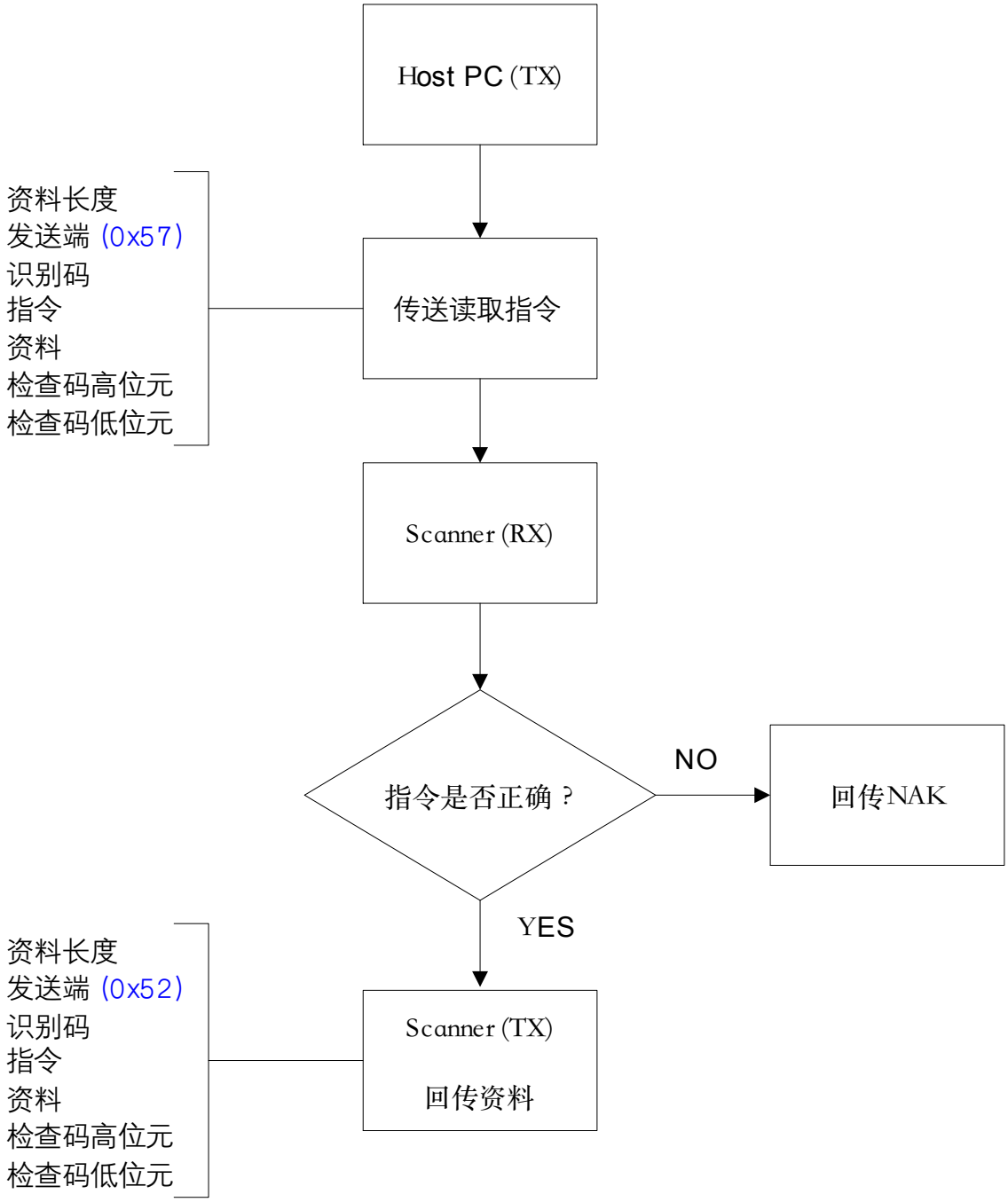

Example of command settings

Start scanning

Length of information	transmitter	identifier	directives	particulars	Check code. Higher element.	Check Code Low Bit
05	57	A0	01	01	FF	02

Check digit = 0x10000 - 0x05 - 0x057 - 0xa0 - 0x01 - 0x01 = 0xFF02 (hex)

stop scanning (computing)

Length of information	transmitter	identifier	directives	particulars	Check code. Higher element.	Check Code Low Bit
05	57	A0	01	00	FF	03

Check digit = 0x10000 - 0x05 - 0x057 - 0xa0 - 0x01 - 0x00 = 0xFF03 (hex)

Enable Scan Command ACK Feedback

Length of information	transmitter	identifier	directives	particulars	Check code. Higher element.	Check Code Low Bit
05	57	A0	00	01	FF	03

Check digit = 0x10000 - 0x05 - 0x057 - 0xa0 - 0x00 - 0x01 = 0xFF03 (hex)

Set Decode Time 1 second (1000ms) (two bits of data length)

Length of information	transmitter	identifier	directives	particulars	Check code. Higher element.	Check Code Low Bit
06	57	A1	16	03E8 (1000 ms)	FE	01

Check digit = 0x10000 - 0x06 - 0x057 - 0xa1- 0x15 - 0x03 - 0xE8 = 0xFE01 (hex)

Storage Settings

Length of information	transmitter	identifier	directives	particulars	Check code. Higher element.	Check Code Low Bit
05	57	A0	08	01	FE	FB

Check digit = 0x10000 - 0x05 - 0x057 - 0xa0 - 0x08- 0x01 = 0xFEFB (hex)

Setting the Scan Trigger String

Start Setup

cloture

1~8 ASCII characters can be set.

Set the scan trigger string to TRG

1. Scanning "Set scan trigger string"

3. Scanning the ASCII Code table, T Setting Code

3. Scanning the ASCII Code table, R Setup Code

3. Scan the ASCII Code table, G Setup Code

4. Scanning for "end settings"

Setting the Scan Trigger String

Ending

Settings

Setting the Stop Scan String

Start Setup

cloture

1~8 ASCII characters can be set.

Set the scan trigger string to OFF

1. Scanning "Set interrupt scan string"

3. Scan the ASCII Code table, O Setup Code

3. Scanning the ASCII Code table, F setting code

3. Scanning the ASCII Code table, F setting code

4. Scanning for "end settings"

Ending

Settings

instruction set

functionality		identifier	directives	particulars
Confirmation of communication status		0E	0D	01
Read version		0E	0D	02
Read Scan Mode		0E	0D	03
Read scanning status		0E	0D	04
Read decoding results		0E	0D	05
Scanning for ACK / NAK responses	show (a ticket)	A0	00	01
	cloture	A0	00	00
Command ACK / NAK response	show (a ticket)	A0	00	10
	cloture	A0	00	11
scanning control	Start scanning	A0	01	01
	stop scanning (computing)	A0	01	00
Storage Settings		A0	08	01
restore the default		A1	01	0F
Save customized settings		A1	01	08
Load customized settings		A1	01	CF

scanning mode	keystroke scanning	A1	02	01
	Auto Scan	A1	02	02
	continuous scan	A1	02	03
	Pulse Mode	A1	02	04
Auto-sensing Spirit Mode	infrared trigger	A1	02	11
	image triggering	A1	02	12
	Image and infrared triggering	A1	02	13

functionality		identifier	directives	particulars
sighting light	cloture	A1	03	00
	On during scanning	A1	03	01
	Always on.	A1	03	02
Fill light working mode	cloture	A1	04	00
	On during scanning	A1	04	01
	Always on.	A1	04	02
Fill light intensity	low brightness	A1	04	11
	Medium order brightness	A1	04	12
	high brightness	A1	04	13
Decode Beep	opens	A1	05	0E
	cloture	A1	05	0D

Decoding time (two bits of data length) 0 means continue decoding until read		A1	16	00~FFFF
Same barcode reading mode	non-repeated reading	A1	08	01
	interval reading	A1	08	02
	Does not read an identical barcode	A1	08	03
	Does not read an identical barcode	A1	08	04
Same barcode reading time (two bits of data length) 0 means no interval		A1	18	00~FFFF

functionality		identifier	directives	particulars
Auto-sensing sensitivity	low sensitivity	A1	0A	01
	medium sensitivity	A1	0A	02
	high sensitivity	A1	0A	03
Decode data checking	cloture	A1	0B	01
	Read secondary	A1	0B	02
	Read it three times.	A1	0B	03
Decoding Messages	opens	A2	01	0E
	cloture	A2	01	0D

barcode identifier	cloture	A2	02	00
	AIM ID	A2	02	01
	MEXXEN ID	A2	02	02
terminal character	not have	A2	03	01
	CR/LF	A2	03	02
	CR	A2	03	03
	TAB	A2	03	04

functionality		identifier	directives	particulars
Enables reading of all code systems		B0	01	0E
Close all barcodes		B0	01	0D
One-dimensional code only		B0	01	01
QR code only		B0	01	02
Close the one-dimensional code		B0	01	03
Close QR Code		B0	01	04
UPC / EAN Bit Attachment Code	opens	B0	02	0E
	cloture	B0	02	0D

UPC A	opens	B1	01	0E
	cloture	B1	01	0D
	transmission top priority	B1	02	0E
	Non-transmission of the first	B1	02	0D
	Open check code	B1	03	0E
	Close check code	B1	03	0D
	Open EAN-13 conversion	B1	04	0E
	Close EAN-13 conversion	B1	04	0D

functionality		identifier	directives	particulars
UPC E	opens	B2	01	0E
	cloture	B2	01	0D
	transmission top priority	B2	02	0E
	Non-transmission of the first	B2	02	0D
	Open check code	B2	03	0E
	Close check code	B2	03	0D
	Enable UPC A conversion	B2	04	0E

	Turn off UPC A conversion	B2	04	0D
EAN 8	opens	B3	01	0E
	cloture	B3	01	0D
	transmission check code	B3	02	0E
	Do not transmit check digits	B3	02	0D
	Open EAN-13 conversion	B3	03	0E
	Close EAN-13 conversion	B3	03	0D

functionality		identifier	directives	particulars
EAN 13	opens	B4	01	0E
	cloture	B4	01	0D
	transmission check code	B4	02	0E
	Do not transmit check digits	B4	02	0D
	Open ISBN conversion	B4	03	0E
	Turn off ISBN conversion	B4	03	0D
	Enable ISSN conversion	B4	04	0E
	Turn off ISSN conversion	B4	04	0D

Code 128	opens	B5	01	0E
	cloture	B5	01	0D
Code 39	opens	B6	01	0E
	cloture	B6	01	0D
	Open ASCII	B6	02	0E
	Close ASCII	B6	02	0D
	Transmission start/end character	B6	03	0E
	Do not transmit start/end characters	B6	03	0D

functionality		identifier	directives	particulars
Code 39	not calibrated	B6	04	01
	Calibrate and transmit	B6	04	02
	checksum is not transmitted	B6	04	03
Code 93	opens	B7	01	0E
	cloture	B7	01	0D
Code 32	opens	B8	01	0E
	cloture	B8	01	0D
Code 11	opens	B9	01	0E

	cloture	B9	01	0D
Codabar	opens	BA	01	0E
	cloture	BA	01	0D
	not calibrated	BA	02	01
	Calibrate and transmit	BA	02	02
	checksum is not transmitted	BA	02	03
	Transmission start/end character	BA	03	0E
	Do not transmit start/end characters	BA	03	0D

functionality		identifier	directives	particulars
Plessey	opens	BB	01	0E
	cloture	BB	01	0D
MSI Plessey	opens	BC	01	0E
	cloture	BC	01	0D
	not calibrated	BC	02	01
	Mod 10 calibration	BC	02	02
	Mod 10/10 calibration	BC	02	03

	Mod 11/10 calibration	BC	02	04
	transmit parity bit	BC	03	0E
	The parity bit is not transmitted.	BC	03	0D
Interleaved 2 of 5	opens	BD	01	0E
	cloture	BD	01	0D
	not calibrated	BD	02	01
	Calibrate and transmit	BD	02	02
	checksum is not transmitted	BD	02	03

functionality		identifier	directives	particulars
IATA 2 of 5	opens	BE	01	0E
	cloture	BE	01	0D
Matrix 2 of 5	opens	BF	01	0E
	cloture	BF	01	0D
Straight 2 of 5	opens	D0	01	0E
	cloture	D0	01	0D
Pharmacode	opens	D1	01	0E

	cloture	D1	01	0D
GS1 DataBar 14	opens	D2	01	0E
	cloture	D2	01	0D
GS1 DataBar 14 Stacked	opens	D2	02	0E
	cloture	D2	02	0D
GS1 DataBar Expanded	opens	D3	01	0E
	cloture	D3	01	0D
GS1 DataBar Expanded Stacked	opens	D3	02	0E
	cloture	D3	02	0D

functionality		identifier	directives	particulars
GS1 DataBar Limited	opens	D4	01	0E
	cloture	D4	01	0D
CC-A	opens	D5	01	0E
	cloture	D5	01	0D
CC-B	opens	D6	01	0E
	cloture	D6	01	0D
CC-C	opens	D7	01	0E

	cloture	D7	01	0D
PDF 417	opens	D8	01	0E
	cloture	D8	01	0D
Micro PDF 417	opens	D9	01	0E
	cloture	D9	01	0D
Data Matrix	opens	DA	01	0E
	cloture	DA	01	0D
Rectangular Data Matrix	opens	DA	03	0E
	cloture	DA	03	0D

functionality		identifier	directives	particulars
QR	opens	DB	01	0E
	cloture	DB	01	0D
Micro QR	opens	DC	01	0E

	cloture	DC	01	0D
Aztec	opens	DD	01	0E
	cloture	DD	01	0D
MaxiCode	opens	DE	01	0E
	cloture	DE	01	0D

Appendix I Decimal figures

0

1

2

3

4

5

6

7

8

9

Appendix II Barcode Setting Code

UPC A

UPC E

EAN 8

EAN 13

Code 128

Code 39

Code 93

Code 32

Appendix II Barcode Setting Code

Code 11

Codabar

Plessey

MSI Plessey

Interleaved 2 of 5

IATA 2 of 5

Matrix 2 of 5

Straight 2 of 5

Appendix II Barcode Setting Code

Pharmacode

GS1 DataBar 14

GS1 DataBar Expanded

GS1 DataBar Limited

GS1 DataBar 14 Stacked

GS1 DataBar Expanded Stacked

Composite Code-A

Composite Code-B

Appendix II Barcode Setting Code

Composite Code-C

PDF417

Micro PDF417

Data Matrix

QR

Micro QR

Aztec

MaxiCode

Appendix III ASCII Code Table

hexadecimal	decimal system	ASCII	Function Key Mapping		
			cloture	Ctrl Char	Alt+Unicode
00 (NUL)	0	NUL	cloture	Ctrl+@	Alt + 000
01 (SOH)	1	SOH	Home	Ctrl+A	Alt + 001
02 (STX)	2	STX	End	Ctrl+B	Alt + 002
03 (ETX)	3	ETX	Up Arrow	Ctrl+C	Alt + 003

hexadecimal	decimal system	ASCII	Function Key Mapping		
			cloture	Ctrl Char	Alt+Unicode
04 (EOT)	4	EOT	Down Arrow	Ctrl+D	Alt + 004
05 (ENQ)	5	ENQ	Left Arrow	Ctrl+E	Alt + 005
06 (ACK)	6	ACK	Right Arrow	Ctrl+F	Alt + 006

07 (BEL)	7	BEL	Null	Ctrl+G	Alt + 007

hexadecimal	decimal system	ASCII	Function Key Mapping		
			cloture	Ctrl Char	Alt+Unicode
08	8	BS	Backspace	Backspace	Alt + 008
09	9	TAB	TAB	TAB	Alt + 009

0A (LF)	10	LF	Null	Ctrl+J	Alt + 010
0B (VT)	11	VT	Null	Ctrl+K	Alt + 011

hexadecimal	decimal system	ASCII	Function Key Mapping		
			cloture	Ctrl Char	Alt+Unicode
0C (FF)	12	FF	Null	Ctrl+L	Alt + 012

0D (CR)	13	CR	Enter	Enter	Enter
0E (SO)	14	SO	Page Up	Ctrl+N	Alt + 014
0F (SI)	15	SI	Page Down	Ctrl+O	Alt + 015

hexadecimal	decimal system	ASCII	Function Key Mapping		
			cloture	Ctrl Char	Alt+Unicode

10 (DLE)	16	DLE	F11	Ctrl+P	Alt + 016
11 (DC1)	17	DC1	Null	Ctrl+Q	Alt + 017
12 (DC2)	18	DC2	Null	Ctrl+R	Alt + 018
13 (DC3)	19	DC3	Null	Ctrl+S	Alt + 019

hexadecimal	decimal	ASCII	Function Key Mapping

	system		cloture	Ctrl Char	Alt+Unicode
14 (DC4)	20	DC4	Null	Ctrl+T	Alt + 020
15 (NAK)	21	NAK	F12	Ctrl+U	Alt + 021
16 (SYN)	22	SYN	F1	Ctrl+V	Alt + 022
17 (ETB)	23	ETB	F2	Ctrl+W	Alt + 023

hexadecimal	decimal system	ASCII	Function Key Mapping		
			cloture	Ctrl Char	Alt+Unicode
18 (CAN)	24	CAN	F3	Ctrl+X	Alt + 024
19 (CAN)	25	EM	F4	Ctrl+Y	Alt + 025
1A (SUB)	26	SUB	F5	Ctrl+Z	Alt + 026
1B (ESC)	27	ESC	F6	Ctrl+[	Alt + 027

hexadecimal	decimal system	ASCII	Function Key Mapping		
			cloture	Ctrl Char	Alt+Unicode
1C (FS)	28	FS	F7	Ctrl+\	Alt + 028
1D (GS)	29	GS	F8	Ctrl+]	Alt + 029
1E (US)	30	RS	F9	Ctrl+^	Alt + 030

1F (US)	31	US	F10	Ctrl+_	Alt + 031

hexadecimal	decimal system	ASCII	
20	32	SPACE	
21	33	!	
22	34	"	

23	35	#	

hexadecimal	decimal system	ASCII	
24	36	$	
25	37	%	

26	38	&	
27	39	'	

hexadecimal	decimal system	ASCII	
28	40	(	

29	41	)	
2A	42	*	
2B	43	+	

hexadecimal	decimal system	ASCII

2C	44	,	
2D	45	-	
2E	46	.	
2F	47	/	

hexadecimal	decimal system	ASCII	
30	48	0	
31	49	1	
32	50	2	
33	51	3	

hexadecimal	decimal system	ASCII	
34	52	4	
35	53	5	
36	54	6	
37	55	7	

hexadecimal	decimal system	ASCII	
38	56	8	
39	57	9	
3A	58	:	
3B	59	;	

hexadecimal	decimal system	ASCII	
3C	60	<	
3D	61	=	
3E	62	>	
3F	63	?	

hexadecimal	decimal system	ASCII	
40	64	@	
41	65	A	
42	66	B	
43	67	C	

hexadecimal	decimal system	ASCII	
44	68	D	
45	69	E	
46	70	F	
47	71	G	

hexadecimal	decimal system	ASCII	
48	72	H	
49	73	I	
4A	74	J	
4B	75	K	

hexadecimal	decimal system	ASCII	
4C	76	L	
4D	77	M	
4E	78	N	
4F	79	o	

hexadecimal	decimal system	ASCII	
50	80	P	
51	81	Q	
52	82	R	
53	83	S	

hexadecimal	decimal system	ASCII	
54	84	T	
55	85	U	
56	86	V	
57	87	W	

hexadecimal	decimal system	ASCII	
58	88	X	
59	89	Y	
5A	90	Z	
5B	91	[	

hexadecimal	decimal system	ASCII	
5C	92	\windshield	
5D	93	]	
5E	94	^	
5F	95	_	

hexadecimal	decimal system	ASCII	
60	96	`	
62	97	a	
62	98	b	
63	99	c	

hexadecimal	decimal system	ASCII	
64	100	d	
65	101	e	
66	102	f	
67	103	g	

hexadecimal	decimal system	ASCII	
68	104	h	
69	105	i	
6A	106	j	
6B	107	k	

hexadecimal	decimal system	ASCII	
6C	108	l	
6D	109	m	
6E	110	n	
6F	111	o	

hexadecimal	decimal system	ASCII	
70	112	p	
71	113	q	
72	114	r	
73	115	s	

hexadecimal	decimal system	ASCII	
74	116	t	
75	117	u	
76	118	v	
77	119	w	

hexadecimal	decimal system	ASCII	
78	120	x	
79	121	y	
7A	122	z	
7B	123	{	

hexadecimal	decimal system	ASCII	
7C	124	|	
7D	125	}	
7E	126	~	
7F	127	Delete	

Appendix IV Function Keys

Insert

Delete

Home

End

Up Arrow

Down Arrow

Left Arrow

Right Arrow

Shift

ESC

Ctrl

Alt

Page Up

Page Down

F1

F2

F3

F4

F5

F6

F7

F8

F9

F10

F11

F12